FIGURE 1: MTCH6303 BLOCK DIAGRAM

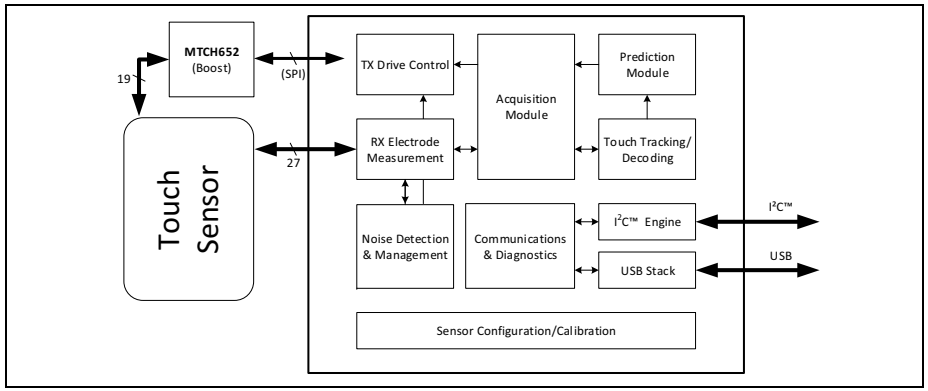

Americas

Atlanta - 678-957-9614
Austin - 512-257-3370
Boston - 774-760-0087
Chicago - 630-285-0071
Cleveland - 216-447-0464
Dallas - 972-818-7423
Detroit - 248-848-4000
Houston - 281-894-5983
Indianapolis - 317-773-8323
Los Angeles - 949-462-9523
New York - 631-435-6000
Phoenix - 480-792-7200
Santa Clara - 408-961-6444
Toronto - 905-673-0699

Europe

Austria - Wels - 43-7242-2244-39
Denmark - Copenhagen - 45-4450-2828
France - Paris - 33-1-69-53-63-20
Germany - Munich - 49-89-627-144-0
Italy - Milan - 39-0331-742611
Netherlands - Drunen - 31-416-690399
Spain - Madrid - 34-91-708-08-90
UK - Wokingham - 44-118-921-5869

Asia/Pacific

Australia - Sydney - 61-2-9868-6733
China - Beijing - 86-10-8569-2100
China - Chengdu - 86-28-8665-5511

Asia/Pacific (Continued)

China - Chengdu - 86-28-8665-5511
China - Chongqing - 86-23-8980-9588
China - Donguan - 86-769-8702-9880
China - Hangzhou - 86-571-8792-8115
China - Hong Kong SAR - 852-2943-5100
China - Nanjing- 86-25-8473-2460
China - Qingdao - 86-532-8502-7355
China - Shanghai - 86-21-5407-5533
China - Shenyang - 86-24-2334-2829
China - Shenzhen - 86-755-8864-2200
China - Wuhan - 86-27-5980-5300
China - Xiamen - 86-592-2388138
China - Xian - 86-29-8833-7252
China - Zhuhai - 86-756-3210040
India - Bangalore - 91-80-3090-4444
India - New Delhi - 91-11-4160-8631
India - Pune - 91-20-3019-1500
Japan - Osaka - 81-6-6152-7160
Japan - Tokyo - 81-3-6880-3770
Korea - Daegu - 82-53-744-4301
Korea - Seoul - 82-2-554-7200
Malaysia - Kuala Lumpur - 60-3-6201-9857
Malaysia - Penang - 60-4-227-8870
Philippines - Manila - 63-2-634-9065
Singapore - 65-6334-8870
Taiwan - Hsin Chu - 886-3-5778-366
Taiwan - Kaohsiung - 886-7-213-7828
Taiwan - Taipei - 886-2-2508-8600
Thailand - Bangkok - 66-2-694-1351

01/27/15

Microchip Technology Inc. • 2355 West Chandler Blvd. • Chandler, AZ 85224-6199

www.microchip.com

The Microchip name and logo, the Microchip logo, and mTouch are registered trademarks of Microchip Technology Incorporated in the U.S.A. and other countries. All other trademarks mentioned herein are property of their respective companies. © 2015, Microchip Technology Incorporated, Printed in the U.S.A. All Rights Reserved. 05/15

DS40001794A

MTCH6303 Multi-Touch Projected Capacitive Touch Screen Development Kit Information Sheet

Overview

This information sheet provides some important details about the MTCH6303 Multi-touch Projected Capacitive Touch Screen Development Kit that will help the user successfully employ the board as quickly as possible.

Microchip's Multi-touch Projected Capacitive Touch Screen Development Kit enables the creation of advanced touch interface solutions using MTCH6303 with up to 18V boost via the MTCH652 device.

The MTCH6303 solution brings advanced features, including noise robustness, larger sensor size support up to 8", faster scanning speeds and the ability to combine with the high-voltage driver, MTCH652, to achieve superior signal to noise ratio. These capabilities enable a wider range of designs, including transparent touch screens over displays with advanced multi-touch gestures for a rich user interface.

The contents of the kit include:

- Touch screen controller board with MTCH6303 and MTCH652 high-voltage driver
- 8" indium tin oxide (ITO) projected capacitive touch screen
- Micro USB cable

For the MTCH6303 Utility software application and more information about Microchip's human interface portfolio, visit www.microchip.com/mTouch.

Getting Started

To get started with the MTCH6303 development board, follow these steps:

1. Download and install the MTCH6303 Utility to a Windows® 7/8 PC from www.microchip.com/mTouch.
2. Connect MTCH6303 development board to the touch screen.
3. Connect MTCH6303 development board to the PC using the Micro USB cable (included in the kit).
4. Launch the MTCH6303 Utility software.
5. Follow the on-screen instructions to insure the latest version of MTCH6303 firmware is downloaded to the controller board.

The MTCH6303 development board should now be up and running.

FIGURE 2: MTCH6303 DEVELOPMENT KIT LAYOUT

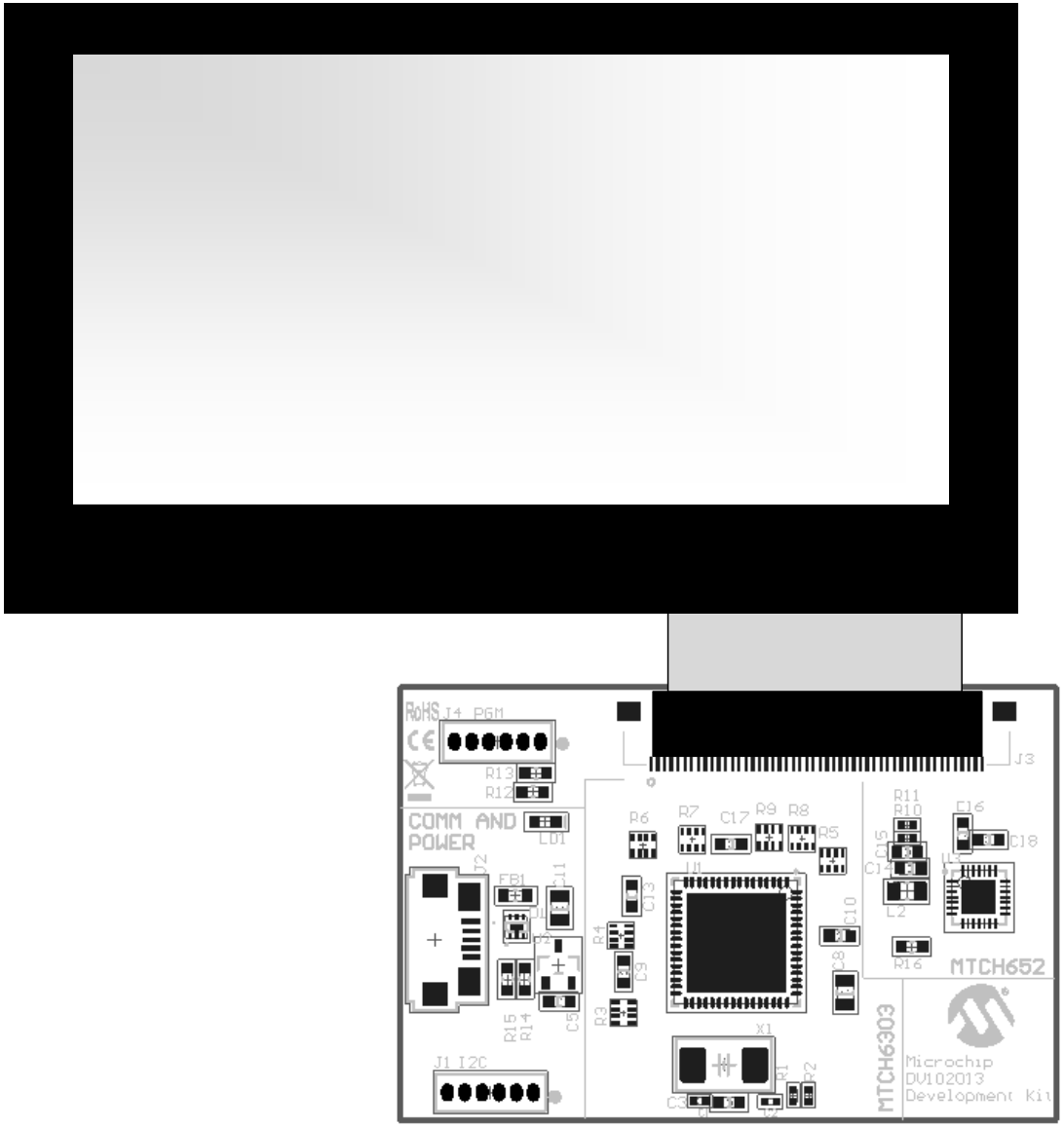

FIGURE 3: MTCH6303 DEVELOPMENT BOARD SCHEMATIC

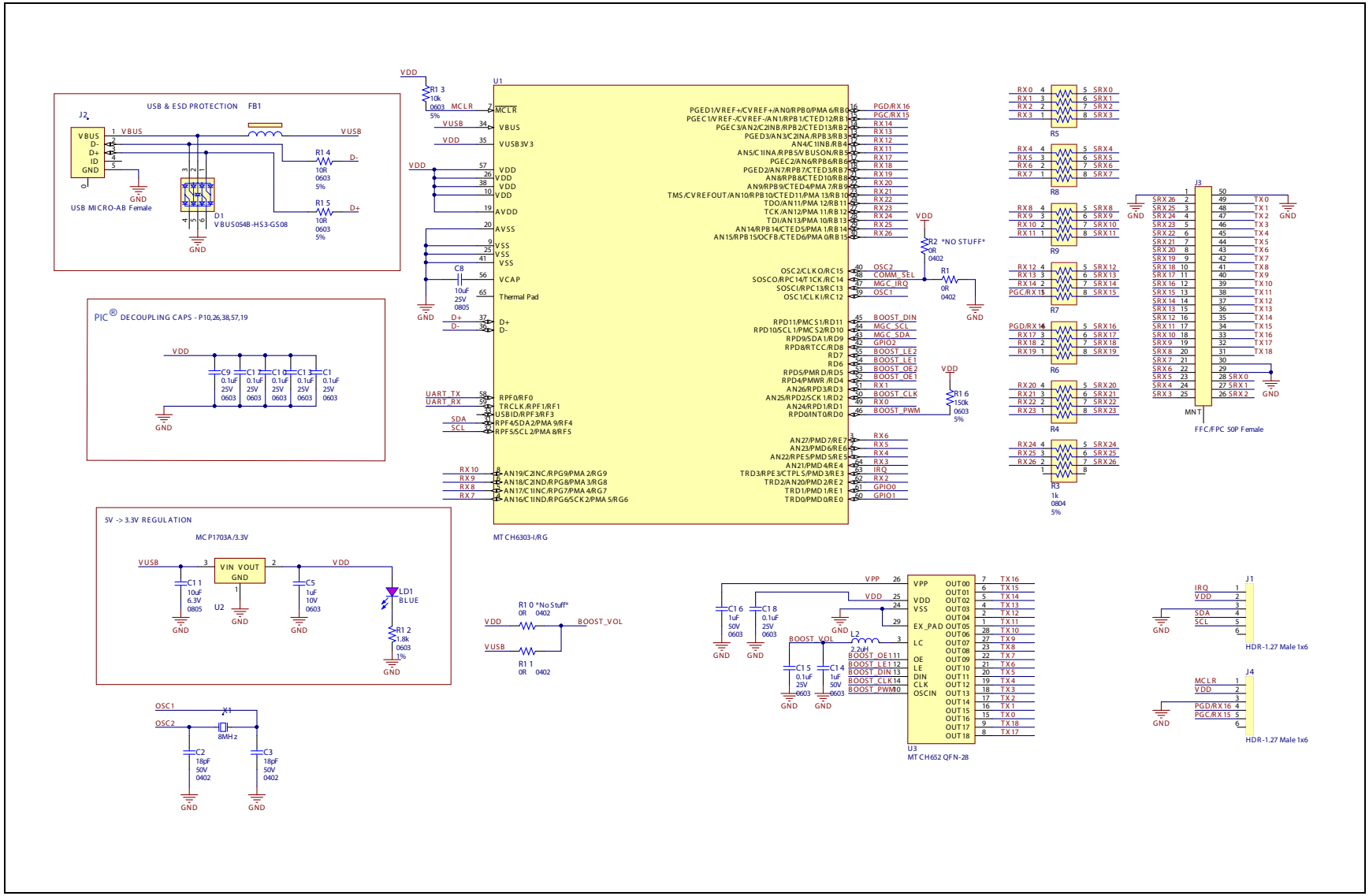

FIGURE 4: EpicIO 8" TOUCH SCREEN (PN: TXP080B002) DRAWING

